Dynamic CMOS

Compare between the static CMOS family and any of the ratioed logic families we studied before by listing the advantages and disadvantages of the CMOS family. An example of a function implemented with both static CMOS family (on the left) and a ratioed logic family (on the right) is shown below just for illustration to help you compare.

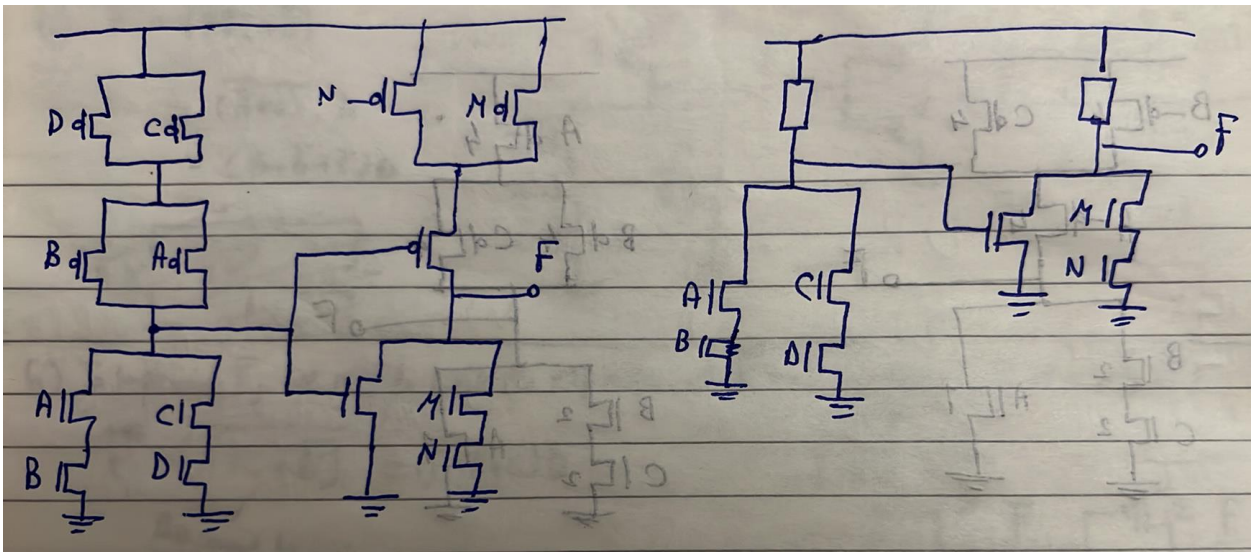

Answer:

–	Static CMOS	Ratioed Logic
Noise Margins	Better	Worse
V_{OH}, V_{OL}	Better	Worse
Static Power	Better	Worse
Area	Worse	Better
Delay	Worse	Better
Num of Transistors	Worse	Better

Comments:

- Area: El area fel static CMOS we7sha besabab el PUN; el PMOS el fel PUN benetar enena ne3melaha sizing kebeer 3ashan ne overcome 7waar el mobility, w tab3an sizing akbar yeb2a area akbar.
- Delay: since PMOS devices beyeb2a leha sizing kebeer, w bel taly load capacitances kebeera 3and el output node, w bel taly delay kebeer. Mesh keda w bs, da kaman fel CMOS ana bada5al el output beta3 stage 3al PUN wel PDN beta3 el stage el ba3deya, fa keda hateb2a shayfa capacitance akbar la2enaha da5la 3al 2 networks el aslan fihom wa7da fiha PMOS el l sizing beta3o kebeer w bel taly capacitance kebeera.

Thus, the purpose of this example is to show that the static CMOS family still has some disadvantages. Hence, we want another approach that satisfy the advantages of both families; static CMOS and ratioed families → ***Dynamic CMOS family.***

The dynamic CMOS family takes the architecture shown below. Only 1 PMOS is used. A PDN is sandwiched between an NMOS and PMOS transistors whose inputs are a clock signal.

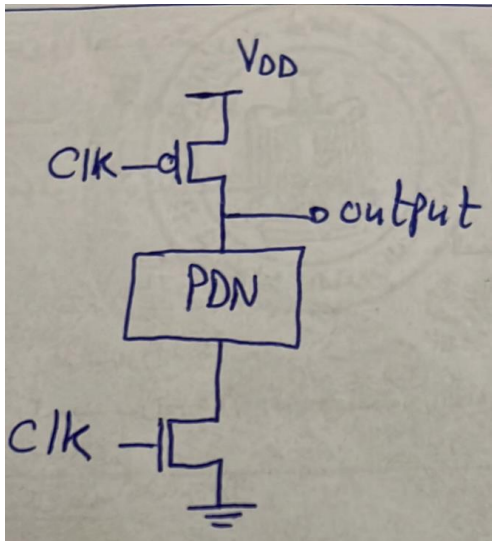

For example, to implement $F = (AB + CD)'$:

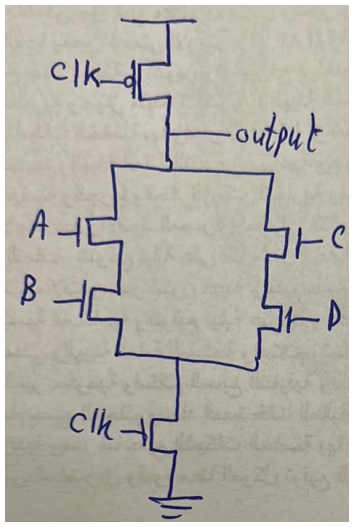

How does an inverter look like?

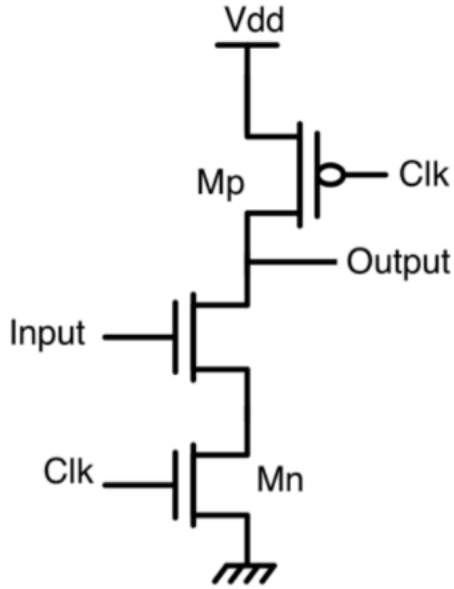

Analyze the previous inverter for the following input waveforms:

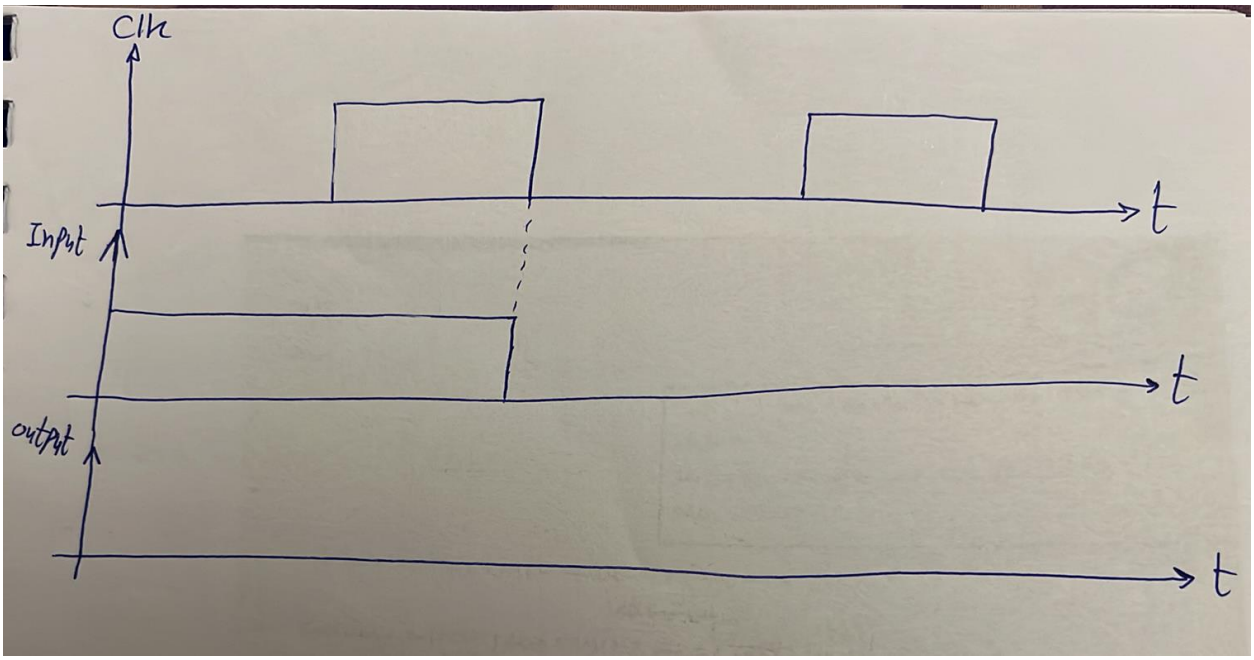

Answer:

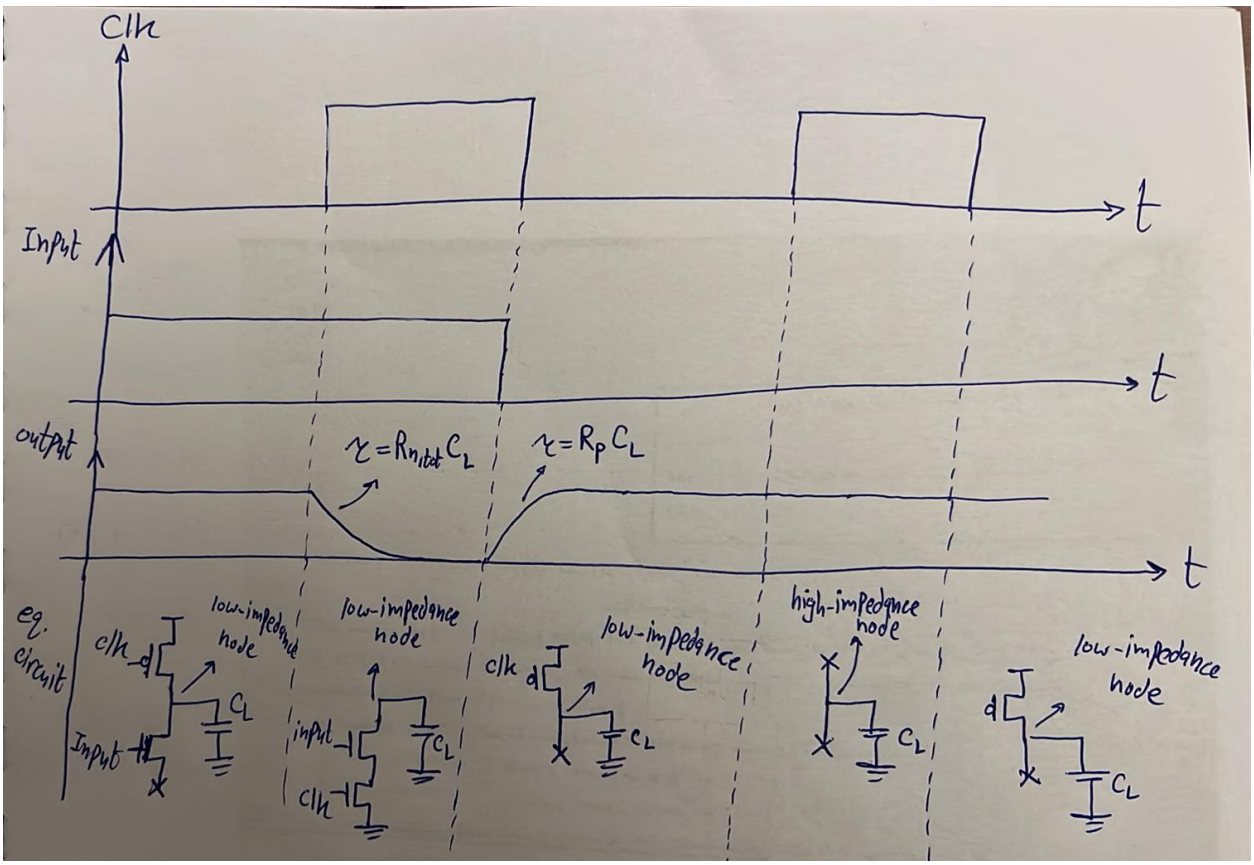

High-impedance node: a node that has high-impedance paths to both VDD and ground (i.e. mafeesh seka wala lel VDD wala lel ground).

Low-impedance node: a node that has a low-impedance path to either VDD and ground (i.e. fi seka le either el VDD or el ground).

Notes:

1) When $clk = 0$, the output is V_{DD} (i.e. no logic is implemented when $clk = 0$).
2) Logic is implemented only while $clk = 1$.
3) No short-circuit current → no static power.
4) $V_{OL} = 0$ and $V_{OH} = V_{DD}$.

Thus, we have achieved the advantages of static CMOS (V_{OH}, V_{OL}, no static power) and ratioed logic (no PUN, less number of transistors).

Notice that:

1) When $clk = 0$ → called pre-charge phase.
2) When $clk = 1$ → called evaluate phase.

A gate should always use the output of its previous gate only during the evaluate phase.

What should be the clock period of clk?

- Evaluate phase T_h: should be such that the PDN + lower NMOS have enough time to discharge the output capacitance:

$$T_h \geq 0.69 R_{eq} C_L$$
$$R_{eq} = R_{PDN}(worst - case) + R_{NMOS}$$
$$C_L = C_{PMOS} + C_{PDN,@output\ node}$$

- Pre-charge phase T_l: should be such that the upper PMOS have enough time to charge the output capacitance:

$$T_l \geq 0.69 R_P C_L$$

$$\therefore T_{clk} \geq 0.69(R_{eq} + R_P)C_L$$
$$\therefore f_{clk} \leq \frac{1}{0.69(R_{eq} + R_P)C_L}$$

$$duty\ cycle(\delta) = \frac{T_h}{T_h + T_l}$$

Leakage Current in Dynamic CMOS

Eh el moshkela hena fel dynamic CMOS inverter da?

El case lama kanet el output node of high impedance (when the PDN evaluates zero in the evaluate phase)! Notice en de case makanetsh mawgoda fi ay family abl keda. For example, el static CMOS kanet beteb2a el output node ya2ema ray7a lel VDD through el PUN, or el ground through el PDN. Fel ratioed logic, kanet nafs el kalam, w sa3at kan yeb2a el seketen mafto7en fi nafs el wa2t kaman. Laken hena fel dynamic, hanla7ez en el output node ya2ema wasla lel VDD through a PMOS, ya2ema lel ground through a PDN+NMOS, ya2ema high impedance! Tab eh moshkelet enaha teb2a high impedance y3ny? Delwa2ty el voltage 3and el output node be VDD, y3ny el capacitor el charge el 3leeh $C_L V_{DD}$, sa7? Fi moshkela bete7sal en sa3at beyetakel 7eta men el charge el 3ala capacitor (we will know why shortly), let it be ΔQ. Fa el charge el 3al capacitor hateb2a $C_L V_{DD} - \Delta Q$ and hence the output voltage will be $\frac{C_L V_{DD} - \Delta Q}{C_L} = V_{DD} - \frac{\Delta Q}{C_L}$ instead of V_{DD}. Lw el node kanet high-impedance node, fa el output voltage hayefdal keda l7d ma tegy el pre-charge phase as shown below:

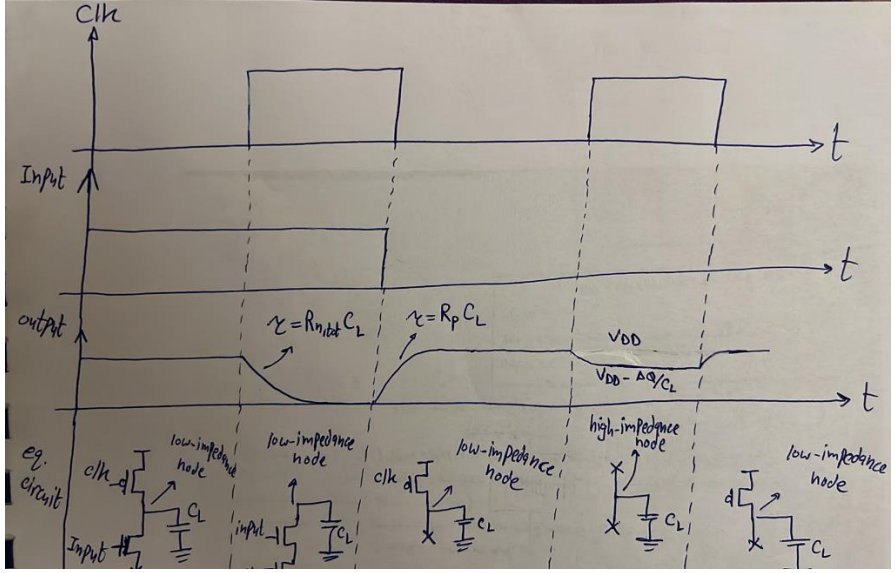

Hal el moshkela de kanet fel CMOS? La2. Leeh? La2en 3omr ma kan beyeb2a fih high-impedance node, fa lw 7ata 7asal en kan 3al output node V_{DD} w etakel meno 7eta b2a $V_{DD} - \frac{\Delta Q}{C_L}$, fa keda b2a fih voltage difference 3al PMOS el fel PUN, w bel taly hayebda2 yemashy current, w bel taly el capacitor hayerga3 yetshe7en 3la tool tany.

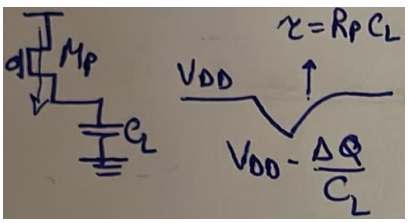

Tab eh el ye5aly el voltage el 3al capacitor te2el aslan? El leakage! E7na 3arfeen en beyeb2a fih leakage current fel transistors de lama teb2a off. W bel taly el equivalent circuit el e7na rasmenha fi 7alet el high-impedance node de mesh daqeqa awy, la2en el NMOS w howa off howa actually still beyes7ab current el howa el leakage current (ignore the PMOS leakage current). Fa el manzar actually 3amel keda:

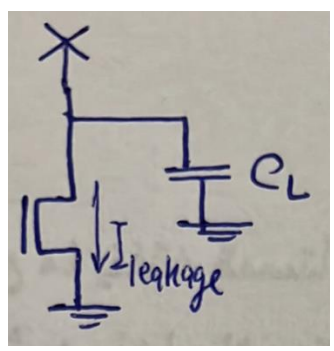

Fa actually fel case el fiha high-impedance node (i.e. in the evaluate phase when the output will maintain its high value), e7na men awel ma ben5osh el case de beyeb2a fih leakage current bey2alelena el voltage el 3al capacitor. Lw 3amalna assumption en $I_{leakage}$ da is constant, fa el output hayebda2 ye2el linearly as shown below:

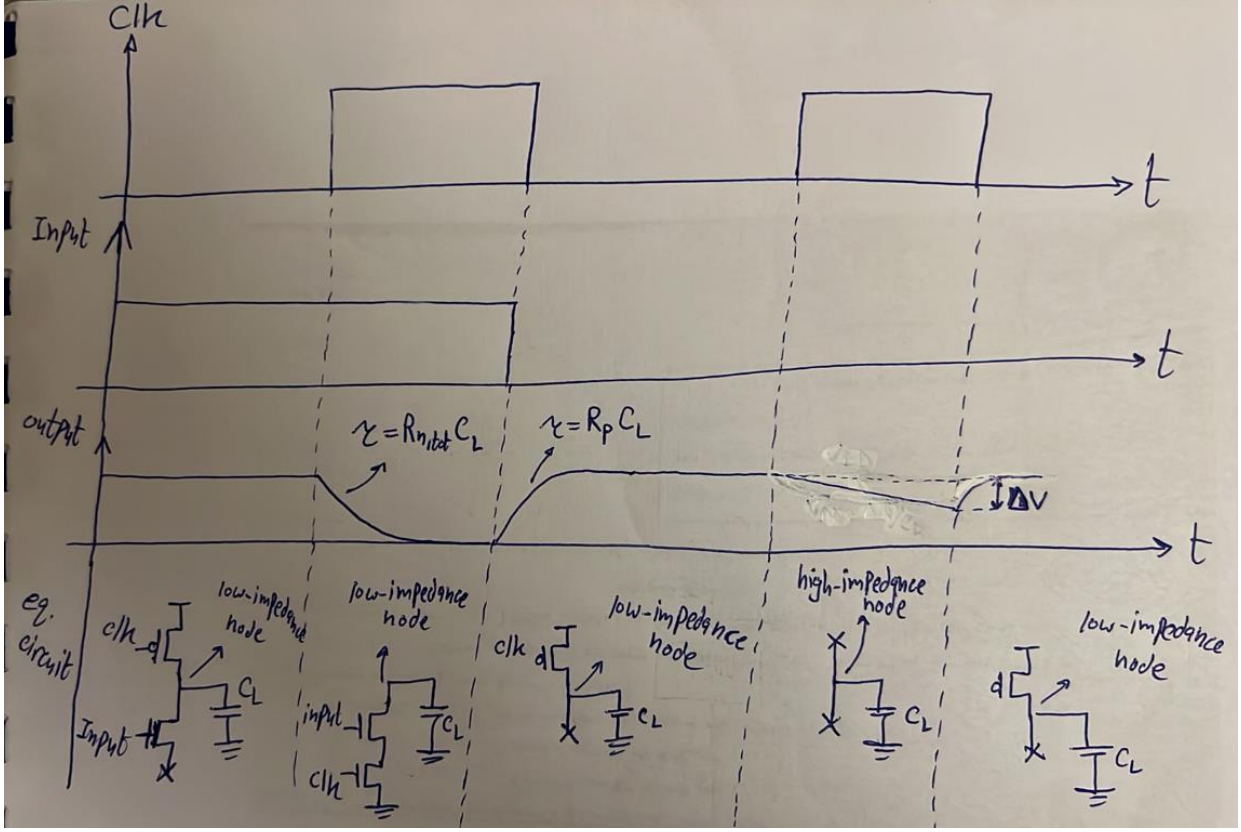

Tab hal el moshkela de makanetsh mawgooda fel static CMOS? La2, leeh? La2en fel static CMOS lama kan beyeb2a el NMOS el t7t cut-off (i.e. fih leakage), fa kan beyeb2a el PMOS el foo2 (aw el PUN in general y3ny) beteb2a on, fa el leakage el by7sl t7t fel NMOS beyet3awad instantaneously by the PUN.

Tefteker da keda hay7otelna limit 3la meen? 3la T_h! Leeh? La2en e7na delwa2ty ama ben5osh el evaluate phase be output already 1, byfdl y7sl leakage constantly l7d ma el phase te5las, fa let el voltage el e7na 2alenah be ΔV as shown fel rasma el fatet. ΔV da a5ro yeb2a kam, y3ny a2dar asta7mel decrease fel output 2ad eh? bel noise margin high NM_H! Lw 2aleet aktar men NM_H keda el output high mesh hayetfehem. Thus:

$$I_{leakage} = C_L \frac{dV_{out}}{dt} = C_L \frac{NM_H}{\Delta t}$$

$$\Delta t = \frac{C_L NM_H}{I_{leakage}}$$

$$\therefore 0.69 R_{eq} C_L \leq T_h < \frac{C_L NM_H}{I_{leakage}}$$

So, notice that, in dynamic CMOS circuits, there is not just an upper limit on the frequency (f_{max}), but there is also a lower limit ($f_{\min}$)!

So, the case that caused the leakage problem in dynamic CMOS is ***when evaluating 1.***

Charge Keeper:

One way to solve the problem of leakage in dynamic CMOS is to use a circuit known as “charge keeper”, which consists of a PMOS transistor, and a static CMOS inverter as shown below:

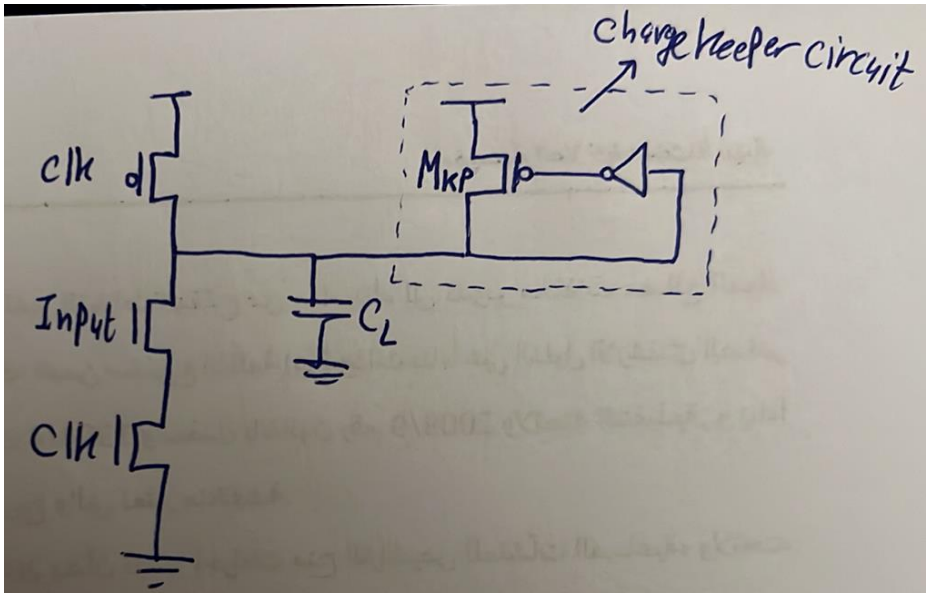

Explanation: enta delwa2ty el leakage beyday2ak emta? Lama bet evaluate 1, y3ny lama teb2a el clock = 1 w kaman el PDN at3a el seka lel ground fa el output beyeb2a high impedance = VDD, wel moshkela bt7sl en el PDN (i.e. NMOS transistors) beyeb2a fiha leakage fa betebda2 te2alel el VDD da. Fa el e7na 3amalnah da haye3mel eh? el charge keeper circuit de hateshtaghal lama yeb2a el output be VDD. Lama yeb2a el output be VDD, el static CMOS inverter haytala3 0, fa el PMOS yeshtaghal, w yefdal shaded el output node de lel VDD. Fa 7ata lw fih leakage t7t, el charge keeper circuit de hateshtaghal w teraga3 el output le VDD, exactly zy ma beye7sal fel PUN beta3t el static CMOS logic.

However, this charge keeper circuit is not practical and is not used. Why? For many reasons:

- Larger area: using a PMOS + a static inverter added 3 transistors to each dynamic gate.
- Evaluate ‘0’ problem: de el moshkela el 7a2e2ya b2a w heya enena ah 7alena moshkelet el evaluate ‘1’ bs han2asar 3al evaluate ‘0’. Leeh? Ta5ayal delwa2ty enena bad2een el evaluate phase w el mafrood ne evaluate 0, y3ny el mafrood el output yenzel men ‘1’ le ‘0’. Fa el output bade2 bekam? Be ‘1’. Fa el charge keeper circuit shaghala. El seka lel ground maftoo7a bema enena ben evaluate ‘0’, fa el output hayebda2 yenzel le ‘0’. Hal el charge keeper circuit hate2fel? La2 hatefdal shaghala, heya mesh fahma 7aga howa madam el output be VDD fa el static CMOS inverter metala3 ‘0’ w bel taly el PMOS shaghal w shaded el output le VDD. Fa keda eh el haye7sal? En athna2 ma el output beyetshad lel ground, which is el 7aga el sa7 el l mafrood te7sal, el charge keeper circuit hat7awel teshedo le VDD, fa el output hayenzel lel ground abta2, fa badal ma kan beyenzel bel time constant el olna 3leeh, la2 haya5od wa2t Atwal, w bel taly el T_h hateb2a atwal and hence frequency a2al. Specifically, el wad3 as shown below, fel awel kan el capacitor bey discharge be current I_{PDN}, delwa2ty besabab el charge keeper circuit b2a bey discharge be current a2al $I_{PDN} - I_{kp}$, fa haya5od wa2t Atwal. Hayefdal el output yenzel be bot2 keda l7d emta? L7d ma el PMOS yeb2a da5el 3leeh 7aga a3la men $V_{DD} - V_{th_{kp}}$ fa ye2fel, w da haye7sal lama el static CMOS inverter yeb2a metala3 7aga a3la men $V_{DD} - V_{th_{kp}}$, fa nerga3 b2a lel static CMOS inverter DC characteristics w nshoof el input el 3ando beyeb2a el output be $V_{DD} - V_{th_{kp}}$, wel input da howa el lama el output node tewsalo el charge keeper circuit hate2fel.

$$I_C = I_{PDN} - I_{Mk}$$

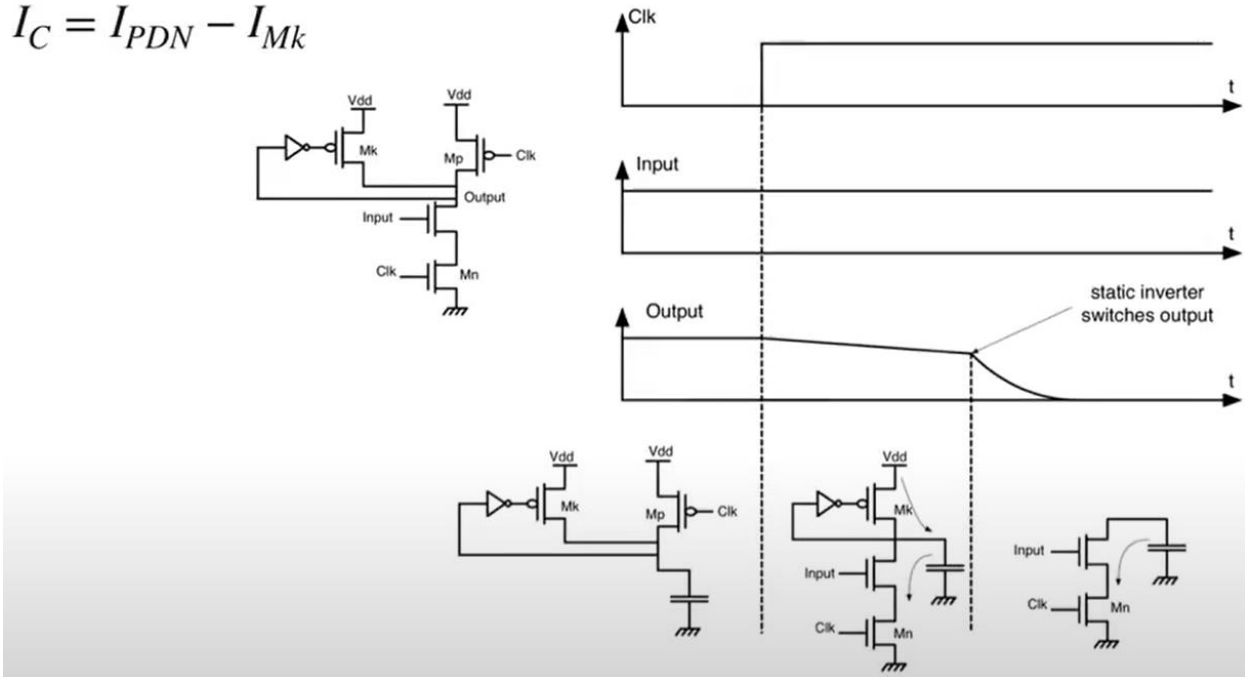

- Omal ben7el moshkelet el leakage ezay? zy ma olna fel awel, enena just n7ot upper limit lel T_h w 5alas, mesh benesta5dem charge keeper circuit.

Charge Sharing

Consider the circuit shown below on the left. Three capacitors separated by switches, and at the beginning the voltage on capacitor C_1 is V_1, capacitor C_2 is V_2, and capacitor C_3 is V_3.

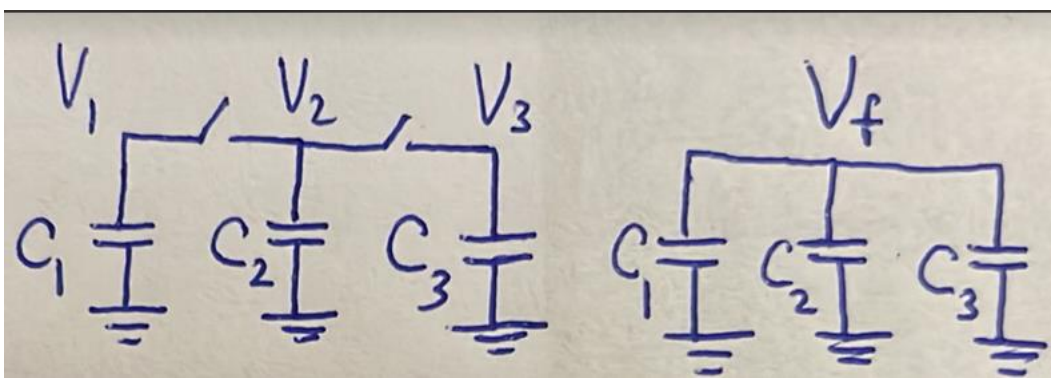

Now, the switches are suddenly closed. What happens? The three capacitors became parallel, hence the voltage on them all should be the same. Bs kam? Hal V_1? Hal V_2? Hal V_3? Fel 7a2e2a el lazem yefdal met7a2a2 hena howa en el total charges tefdal zy ma heya. Fa fel case el 3al yemen el total charges kanet $C_1V_1 + C_2V_2 + C_3V_3$. Tab 3al yemen? Ayan kan el voltage el hayeb2a 3ala el 3 capacitors, let it be V_f, lazem bardo el total charges, el howa hayeb2a $(C_1 + C_2 + C_3).V_f$ yefdal the same. Thus:

$$C_1V_1 + C_2V_2 + C_3V_3 = (C_1 + C_2 + C_3)V_f$$

$$\therefore V_f = \frac{C_1V_1 + C_2V_2 + C_3V_3}{C_1 + C_2 + C_3}$$

What happened here exactly is called “charge sharing”, el charges el kanet 3al 3 caps edtaret enaha te3eed tawze3ha 3ashan te7a2a2 en el 3 caps yeb2a 3leehom nafs el voltage. Fa fel awel kanet el charges bel tarteeb C_1V_1, C_2V_2, C_3V_3 w b3d el switches ma 2afalet ba2et C_1V_f, C_2V_f, C_3V_f, w da howa el charge sharing.

Tab da malo w maal el dynamic CMOS? Consider the 4-input NAND gate shown below.

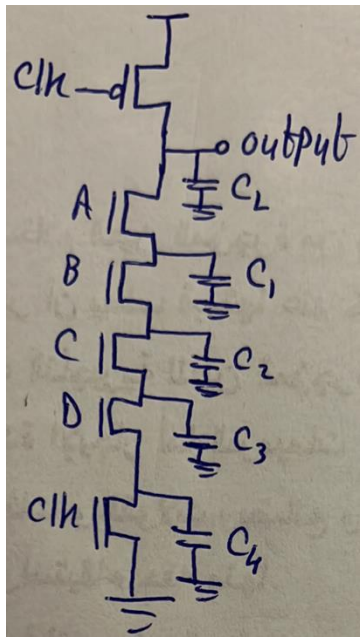

Previously, we used to ignore the internal caps at the internal nodes, but now we will consider them because they introduce a big disadvantage in dynamic CMOS circuits.

Assume the input $ABCD$ was 0000 in the evaluate phase. The equivalent circuit becomes:

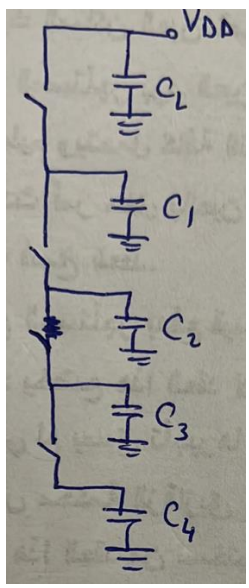

The output will remain V_{DD} and everything is fine.

Now assume the input becomes $ABCD = 1000$.

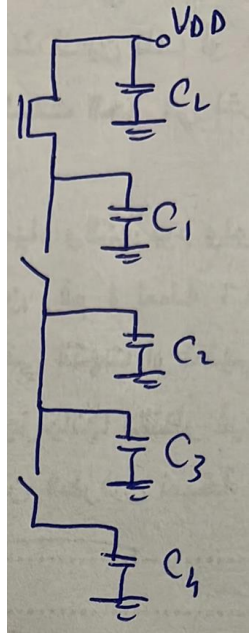

So what happens now is that charge sharing will occur between C_L and C_1. This means that the voltage at the output will become:

$$V_{out} = \frac{C_L V_{DD} + C_1 V_1}{C_L + C_1}$$

Fa eh el 7asal delwa2ty? El mafrood el output kan V_{DD} w yefdal V_{DD} la2en howa da el evaluation beta3 el input. However, besabab el charge sharing el output b2a $\frac{C_L V_{DD} + C_1 V_1}{C_L + C_1}$. Tab wel value de el heya kam y3ny? 7asab V_1 kanet bkam, fa enta w 7azak b2a, momken kan yeb2a 7azak helw w teb2a kanet V_{DD}, fa el V_{out} yefdal be V_{DD} 3ady, w momken yeb2a 7azak we7esh awy w kanet teb2a zero, fa V_{out} kan yeb2a:

$$V_{out} = \frac{C_L}{C_L + C_1} V_{DD}$$

Tab what is the worst-case charge sharing that might happen?

When the inputs become $ABCD = 1110$:

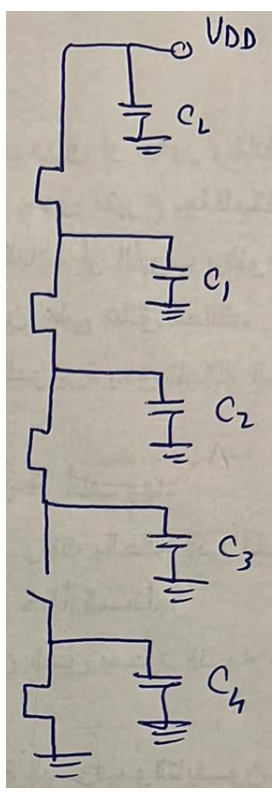

In this case V_{out} becomes:

$$V_{out} = \frac{C_L V_{DD} + C_1 V_1 + C_2 V_2 + C_3 V_3}{C_L + C_1 + C_2 + C_3}$$

Fa bardo enta w 7azak 7asab values V_1, V_2, V_3 momken V_{out} teb2a be V_{DD} aw te get degraded. Eh el worst-case? Lama yeb2a $V_1 = V_2 = V_3 = 0$. Tab emta el case de te7sal aslan? En tkoon el capacitors C_1, C_2, C_3 mefadeyeen kol el charges el 3leehom. Tyb da ye7sal emta? Lama yeb2a fel evaluate phase el abl de kan el input ABCD = x111. Bs keda? La2 wel pre-charge phase el mabenhom kaman yeb2a fiha el input A = 0. This guarantees that $V_1 = V_2 = V_3 = 0$ in the second evaluate phase. That is:

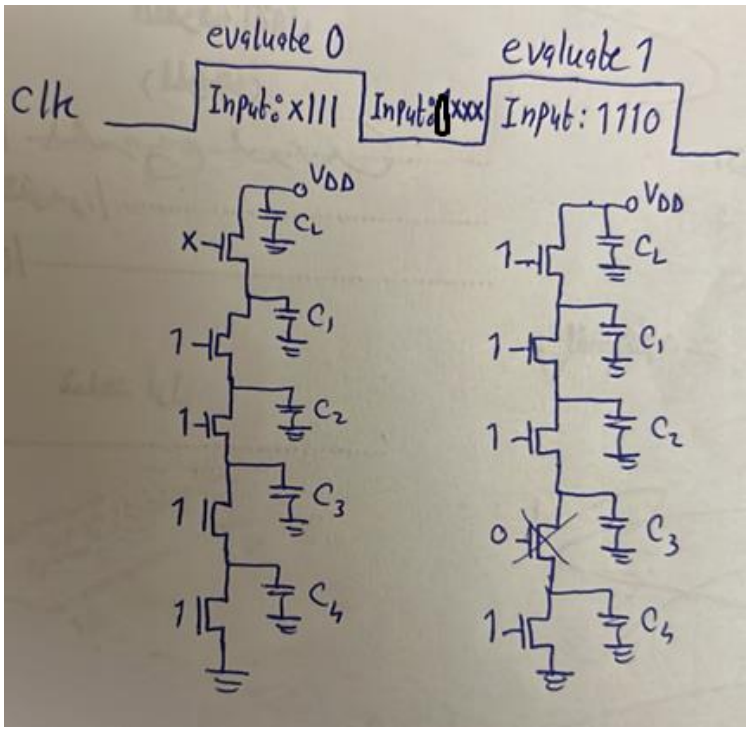

So, the worst case for charge sharing is when we evaluate 0 then yegy ba3deha evaluate 1.

Question: what is the input at the second evaluate phase that guarantees no charge sharing irrespective of what happened in the previous evaluate and pre-charge phases?

Answer: when $A = 0$ in the second evaluate phase.

Question: assuming the input in the second evaluate phase is that of the worst case (i.e. $ABCD = 1110$). What are the inputs in the previous phases that guarantees no charge sharing?

Answer: ABCD = 111x in the previous pre-charge phase, or ABCD = 1110 in the previous evaluate phase.

Yeb2a eh el yedmanly en mayeb2ash fih charge sharing? Eny adman en el capacitors C_1, C_2, C_3 ye pre-charge-o ma3 C_L, be ma3na el fel pre-charge phase ykoon mafto7lohom seka lel V_{DD}, w da haye7sal 3an taree2 eny adman en $ABC = 111$ during the pre-charge phase. Tab howa ABC dool gayenly menen? Men el output beta3 gate zayee bzbt, wel output beta3y beyetla3 aslan le V_{DD} athna2 el pre-charge phase, fa da ma3nah en f3ln ABC bytl3o le V_{DD} athna2 el pre-charge phase! Fa moshkelet el charge sharing de shaklaha ela 7aden ma keda ma7lola fel dynamic CMOS (bs mesh awy bardo, keda me7tag wa2t en el caps de te charge athna2 el pre-charge phase).

Again, hal el moshkela de kanet fel static CMOS? No. Leeh? La2en 7ata lw 7asal charge sharing mabeen el output capacitance wel internal capacitances, fa sa3et-ha beteb2a el PUN shaghala w bel taly el output node beterga3 tany lel V_{DD}.

So, again, the case that caused the charge sharing problem in dynamic CMOS is ***when evaluating 1.***

Logical Effort

Note: even in dynamic CMOS, our reference is still the unit static CMOS inverter. Why? So that we be able to compare between static and dynamic CMOS gates.

Find the logical effort of N-input NAND, N-input NOR, and NOT dynamic CMOS gates, assuming no clock NMOS transistor for simplicity.

Answer:

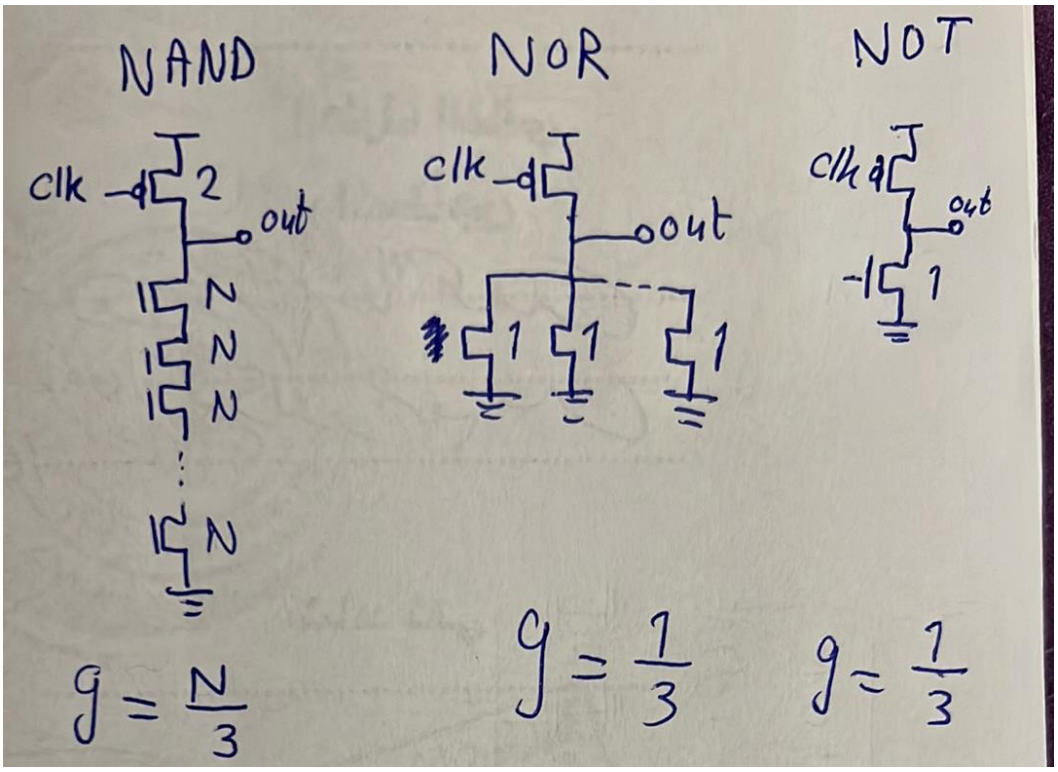

Comparing with static CMOS:

–	Static CMOS	Dynamic CMOS
g_{NAND}	$\frac{N+2}{3}$	$\frac{N}{3}$
g_{NOR}	$\frac{2N+1}{3}$	$\frac{1}{3}$
g_{NOT}	1	$\frac{1}{3}$

This tells us very important results:

1) Logical effort in dynamic CMOS is less than that of static CMOS, which shows that ***dynamic CMOS gates are faster than static CMOS gates.***
2) NOR gates have less delay compared to NAND gates in dynamic CMOS, although the case was flipped in static CMOS.
3) Dynamic NOR gates' logical effort is independent of the number of inputs!
4) Dynamic NOR gates do not suffer from charge sharing because simply there are no internal nodes!

Note: bema en bayen awy en el NOR gate helwa gedan fel dynamic CMOS (bs fiha leakage don't forget!), actually de f3ln el most used dynamic gate, 7ata lw 3ayez asta5dem NAND gate, fa basta5dem NOR w ba make use of De Morgan's theorem.

Cascading

Negy b2a lel disadvantage el qatela fel dynamic CMOS, w heya lama negy ne cascade dynamic gates wara b3d. For the below cascaded inverters and the shown input, try to draw out1 and out2:

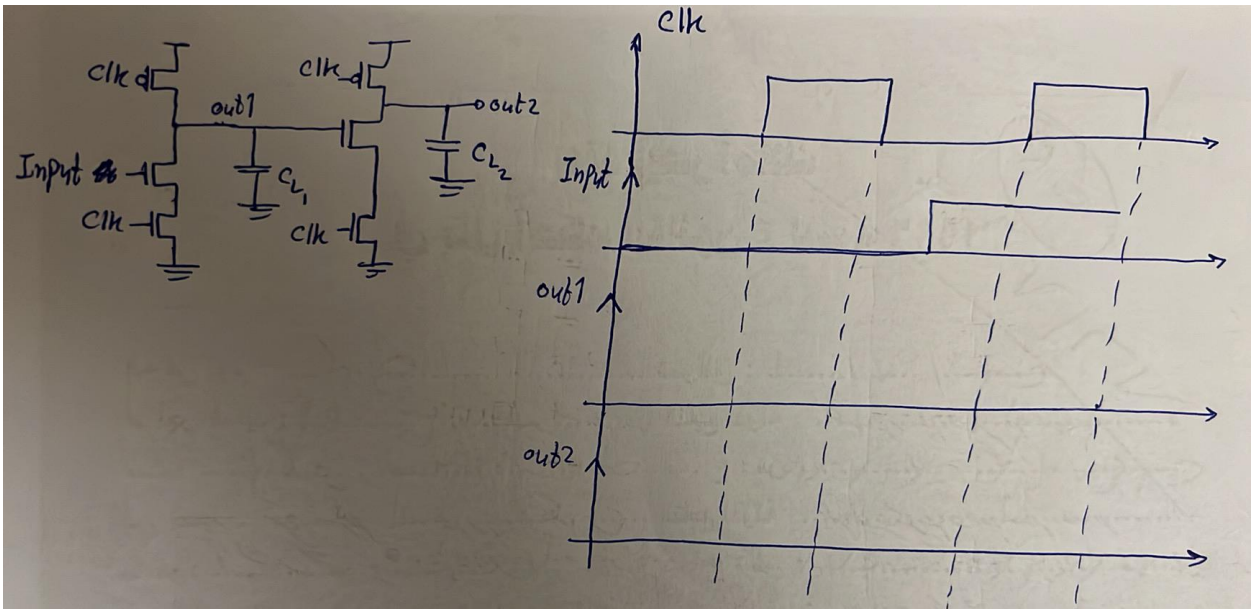

Answer:

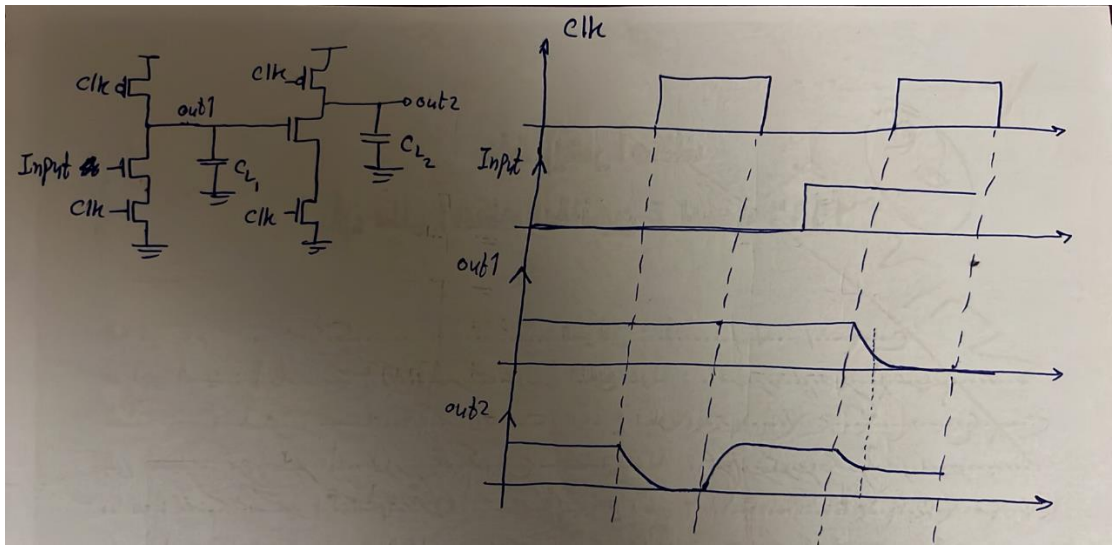

So, it is clear that it is unsuccessful to cascade two dynamic CMOS gates. So, again, the problem here occurred due to the high-impedance node case. Hal el problem de kanet fel static CMOS? No. Leeh? La2en 7ata lw el gate el ableya el output beta3ha et2a5ar 3o2bal ma yenzel le zero, fa 3ady el output beta3y hayenzel 7eta 3an el 1, laken 3la tool b3deha hayetla3 le 1 tany la2en fih seka lel VDD through the PUN.

So the 3 main disadvantages of dynamic CMOS gates (which are all due to the high-impedance node case):

1) Leakage.
2) Charge sharing.
3) Cascading.

There is a solution for the problem of cascading. Instead of considering the circuit shown below on the left to be the building block of dynamic logic, instead the building block becomes the one on the right.

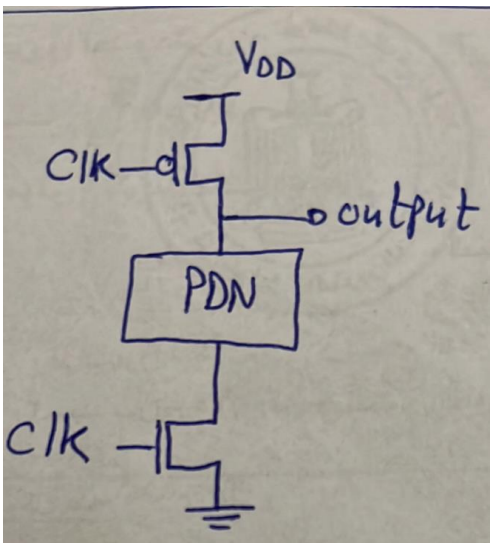

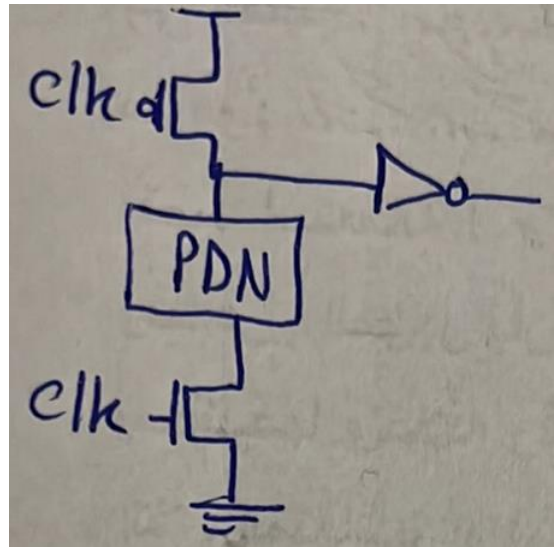

The logic on the right is called ***domino logic.***

To make sure that this *domino logic* solved the problem, let's redraw the timing diagrams again:

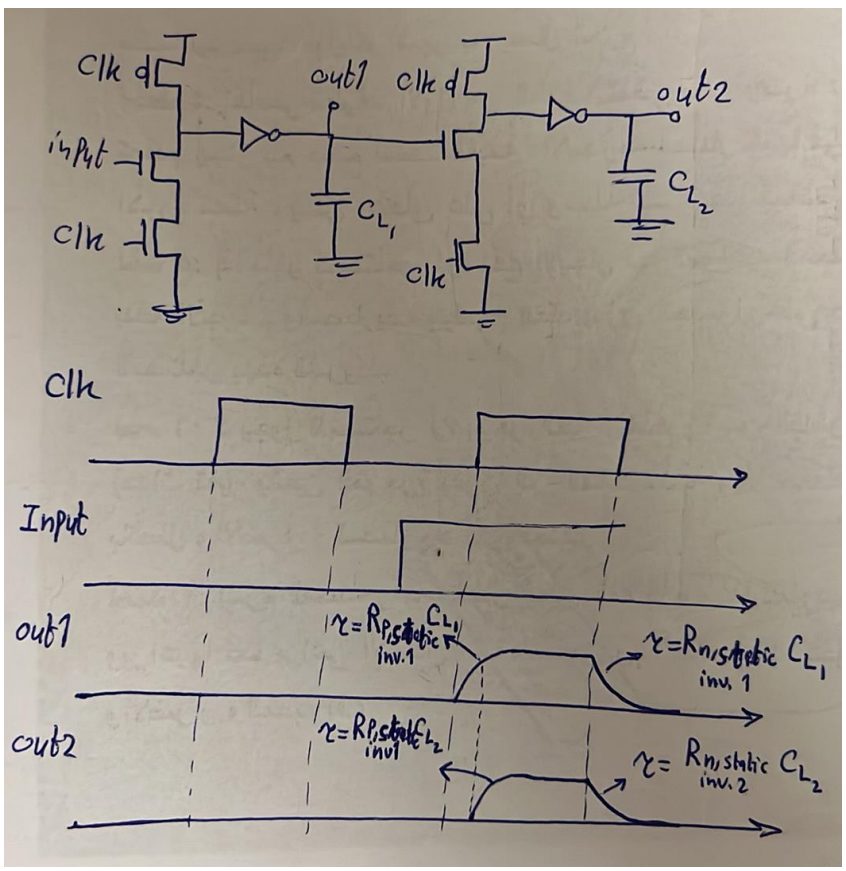

Howa 7al el moshkela ezay bzbt? Eno 5alla el output node beta3t el gate, el heya b3d keda hateb2a input lel gate el ba3deha, teb2a be zero fel pre-charge phase badal ma kanet be one. Eh el far2? Mahe lama kanet be 1 kanet bet5aly el gate el ba3deya teshtaghal fi awel el evaluate phase shwaya abl ma te2fel, bs el moshkela en fel shwaya el heya shaghala fehom ana ka second gate el output beta3y bada2 yenzel shwaya 3ashan kan faker en el input el da5el 3leeh 1, fi 7een eno zero bs 5ad w2t bs 3o2bal ma yenzel, w fel wa2t da kan el output beta3y nezel shwaya, wel nezlo da mesh ha2dar a3awado 3ashan ba2eet high-impedance node.

Question:

Do we still need the clock NMOS in domino logic?

Answer:
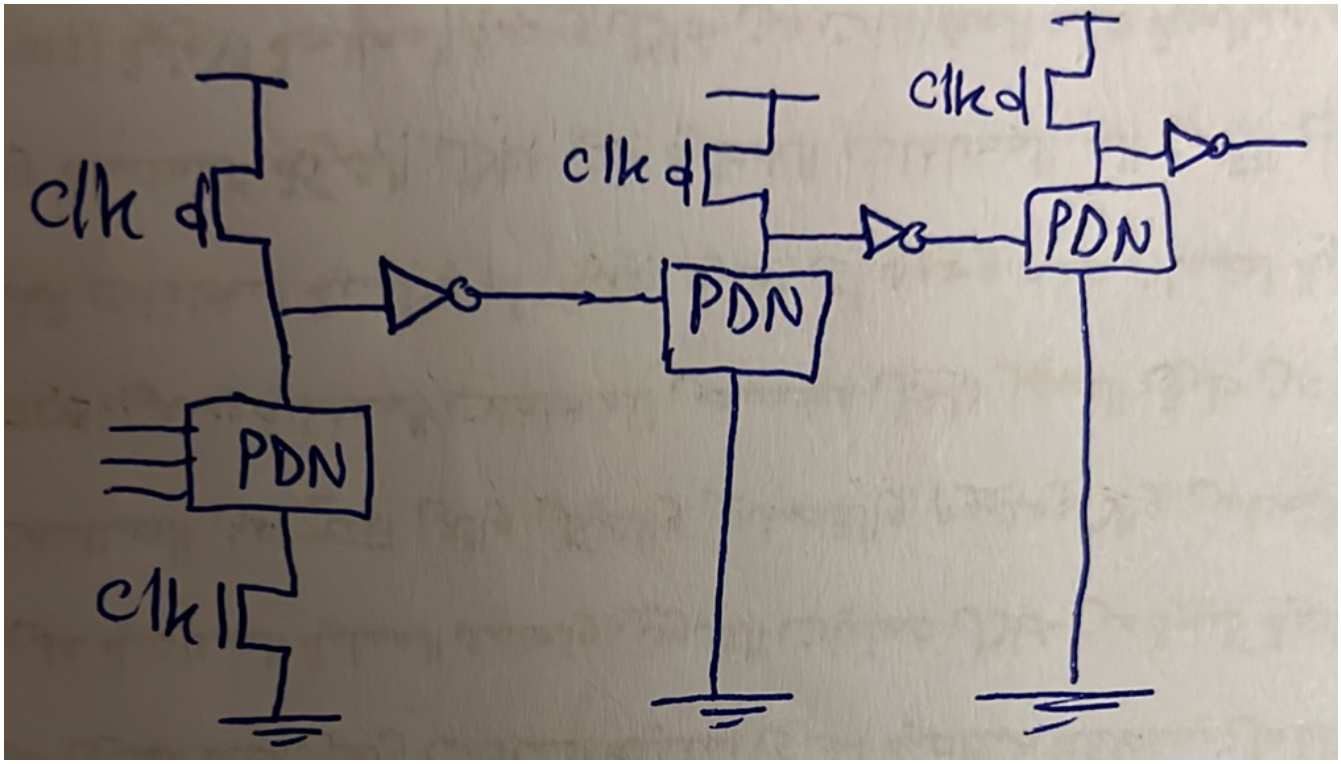
No. Why? Howa kan eh este5dam el clock NMOS fel awel? Kan beyedmanly en fel pre-charge phase el seka lel ground ma2fola, w bel taly beyedmanly en el output yeb2a be VDD. Lw kona shelna el clock NMOS kona haneb2a ta7t ra7met el inputs el fel PDN, walahy lw 2afalet heya el seka lel ground el pre-charge phase hatet3emel sa7 3ady, ma2afeltosh hayeb2a fih short-circuit current wel denya hatbooz, 3ashan keda kona ben7oto. Tyb hena fel domino logic, meen howa el input beta3y? el output beta3 el gate el ableya. Helw, el heya meen b2a? el output beta3 el static inverter, EL HOWA FEL PRE-CHARGE PHASE HAYEB2A METALA3 ZERO ASLAN! W bel taly keda ana dayman damen en fel domino logic kol el inputs le kol el gates be zero w bel taly el seka lel ground ma2fola, w bel taly ma3odnash me7tageen el clock NMOS aslan! Hal kol el domino gates el fel chain keda mesh me7taga el clock NMOS da? Awel domino gate bs heya el hate7tago 3ashan el input beta3ha mesh shart ykoon domino gate, momken yekoon static gate aw input gayly men bara, ay 7aga. Thus, a chain of domino logic will look like: